US009825352B2

(12) **United States Patent**
Vance et al.

(10) **Patent No.: US 9,825,352 B2**
(45) **Date of Patent: Nov. 21, 2017**

(54) **WIRELESS ELECTRONIC DEVICES INCLUDING A FEED STRUCTURE CONNECTED TO A PLURALITY OF ANTENNAS**

(71) Applicant: **Sony Corporation**, Tokyo (JP)

(72) Inventors: **Scott Vance**, Staffanstorp (SE); **Rune So**, Copenhagen N (DK)

(73) Assignee: **SONY MOBILE COMMUNICATIONS INC.**, Tokyo (JP)

(*) Notice: Subject to any disclaimer, the term of this patent is extended or adjusted under 35 U.S.C. 154(b) by 468 days.

(21) Appl. No.: **13/943,388**

(22) Filed: **Jul. 16, 2013**

(65) **Prior Publication Data**

US 2014/0375509 A1 Dec. 25, 2014

Related U.S. Application Data

(60) Provisional application No. 61/837,371, filed on Jun. 20, 2013.

(51) **Int. Cl.**
H01Q 1/24 (2006.01)
H01Q 9/42 (2006.01)
H01Q 21/30 (2006.01)

(52) **U.S. Cl.**
CPC ***H01Q 1/243*** (2013.01); ***H01Q 9/42*** (2013.01); ***H01Q 21/30*** (2013.01)

(58) **Field of Classification Search**
CPC H01Q 1/243; H01Q 9/42; H01Q 21/30
See application file for complete search history.

(56) **References Cited**

U.S. PATENT DOCUMENTS

7,889,139	B2 *	2/2011	Hobson	H01Q 1/243 343/702
2003/0058177	A1	3/2003	Nishikido et al.	
2006/0244663	A1 *	11/2006	Fleck	G06F 1/1616 343/700 MS
2008/0316116	A1	12/2008	Hobson et al.	
2009/0153407	A1	6/2009	Zhang et al.	
2011/0128190	A1	6/2011	Galeev	
2011/0241949	A1	10/2011	Nickel et al.	

(Continued)

FOREIGN PATENT DOCUMENTS

EP 2498336 A2 9/2012

OTHER PUBLICATIONS

Notification of Transmittal of the International Search Report and the Written Opinion of the International Searching Authority, or the Declaration, in corresponding PCT Application No. PCT/JP2014/002728 dated Sep. 1, 2014 (11 pages).

(Continued)

Primary Examiner — Robert Karacsony
Assistant Examiner — Amal Patel
(74) *Attorney, Agent, or Firm* — Myers Bigel, P.A.

(57) **ABSTRACT**

Wireless electronic devices are provided. A wireless electronic device may include a ground plane and a metal perimeter around the ground plane. The metal perimeter may include a first antenna radiating element. The wireless electronic device may include a second antenna radiating element between the ground plane and the metal perimeter. Moreover, the wireless electronic device may include a feed structure connected to the second antenna radiating element and the metal perimeter.

15 Claims, 18 Drawing Sheets

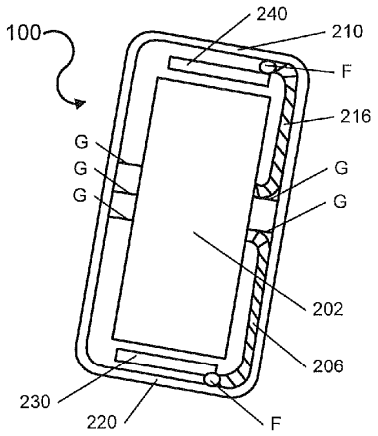

US009825362B2

(12) **United States Patent**
Lee et al.

(10) **Patent No.: US 9,825,362 B2**
(45) **Date of Patent: Nov. 21, 2017**

(54) **ANTENNA STRUCTURE AND WIRELESS COMMUNICATION DEVICE USING THE ANTENNA STRUCTURE**

(71) Applicant: **Chiun Mai Communication Systems, Inc.**, New Taipei (TW)

(72) Inventors: **Yi-Chieh Lee**, New Taipei (TW); **Yen-Hui Lin**, New Taipei (TW)

(73) Assignee: **Chiun Mai Communication Systems, Inc.**, New Taipei (TW)

(*) Notice: Subject to any disclaimer, the term of this patent is extended or adjusted under 35 U.S.C. 154(b) by 248 days.

(21) Appl. No.: **14/555,534**

(22) Filed: **Nov. 26, 2014**

(65) **Prior Publication Data**

US 2015/0155633 A1 Jun. 4, 2015

(30) **Foreign Application Priority Data**

Nov. 30, 2013 (CN) 2013 1 0622350

(51) **Int. Cl.**

H01Q 1/24	(2006.01)
H01Q 5/371	(2015.01)
H01Q 9/42	(2006.01)
H01Q 5/50	(2015.01)

(52) **U.S. Cl.**
CPC ***H01Q 5/371*** (2015.01); ***H01Q 1/243*** (2013.01); ***H01Q 5/50*** (2015.01); ***H01Q 9/42*** (2013.01)

(58) **Field of Classification Search**
CPC H01Q 5/371; H01Q 1/243; H01Q 5/50; H01Q 9/42
USPC 343/702, 833, 846
See application file for complete search history.

(56) **References Cited**

U.S. PATENT DOCUMENTS

6,429,818 B1 *	8/2002	Johnson	.....	H01Q 1/243 343/700 MS
2007/0109202 A1 *	5/2007	Vance	.....	H01Q 1/243 343/702

* cited by examiner

Primary Examiner — Huedung Mancuso
(74) *Attorney, Agent, or Firm* — Steven Reiss

(57) **ABSTRACT**

An antenna structure includes a feed portion, a ground portion, a connecting portion, a first radiating portion, a second radiating portion, and a resonance portion. The ground portion is spaced apart from the feed portion. The connecting portion is electrically connected to the feed portion. The first radiating portion and the second radiating portion are both electrically connected to the connecting portion. The resonance portion is electrically connected to the ground portion. The connecting portion and the resonance portion define a slot therebetween.

19 Claims, 5 Drawing Sheets

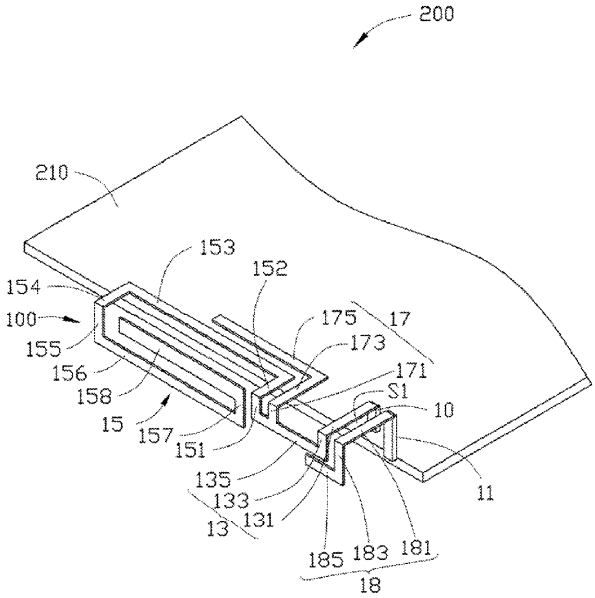

US009825366B2

(12) **United States Patent**
Li et al.

(10) **Patent No.: US 9,825,366 B2**
(45) **Date of Patent: Nov. 21, 2017**

(54) **PRINTED CIRCUIT BOARD ANTENNA AND PRINTED CIRCUIT BOARD**

(71) Applicant: **Huawei Technologies Co., Ltd.**, Shenzhen (CN)

(72) Inventors: **Zhenghao Li**, Shenzhen (CN); **Yao Lan**, Shenzhen (CN); **Lintao Jiang**, Shenzhen (CN); **Jie Qi**, Shenzhen (CN); **Yi Zhang**, Shenzhen (CN); **Yundi Yao**, Shenzhen (CN)

(73) Assignee: **HUAWEI TECHNOLOGIES CO., LTD.**, Shenzhen (CN)

(*) Notice: Subject to any disclaimer, the term of this patent is extended or adjusted under 35 U.S.C. 154(b) by 317 days.

(21) Appl. No.: **14/573,152**

(22) Filed: **Dec. 17, 2014**

(65) **Prior Publication Data**

US 2015/0097752 A1 Apr. 9, 2015

Related U.S. Application Data

(63) Continuation of application No. PCT/CN2014/070043, filed on Jan. 2, 2014.

(30) **Foreign Application Priority Data**

Jan. 6, 2013 (CN) 2013 1 0003161

(51) **Int. Cl.**
H01Q 9/42 (2006.01)
H01Q 9/04 (2006.01)
(Continued)

(52) **U.S. Cl.**
CPC ***H01Q 9/0407*** (2013.01); ***H01Q 1/38*** (2013.01); ***H01Q 1/48*** (2013.01); ***H01Q 5/321*** (2015.01); ***H01Q 5/378*** (2015.01); ***H01Q 9/42*** (2013.01)

(58) **Field of Classification Search**
CPC H01Q 9/0407; H01Q 9/42; H01Q 5/321
See application file for complete search history.

(56) **References Cited**

U.S. PATENT DOCUMENTS

6,768,472 B2 * 7/2004 Alexopoulos H03H 7/40 330/144
7,079,079 B2 * 7/2006 Jo ..... H01Q 1/243 343/700 MS

(Continued)

FOREIGN PATENT DOCUMENTS

CN 1925223 A 3/2007
CN 101320837 A 12/2008

(Continued)

OTHER PUBLICATIONS

Partial English Translation and Abstract of Japanese Patent Application No. JPA2010-074344, Apr. 6, 2016, 31 pages.

(Continued)

Primary Examiner — Dameon E Levi
Assistant Examiner — Hasan Islam
(74) *Attorney, Agent, or Firm* — Conley Rose, P.C.

(57) **ABSTRACT**

A printed circuit board antenna and a printed circuit board are disclosed. The printed circuit board antenna includes a feeding part having at least one first branch; a coupling interdigital part having at least one second branch, where a gap is formed between the first branch and the second branch; a grounding part, where a gap is formed between the grounding part and the feeding part, a gap is formed between the grounding part and the coupling interdigital part, an opening is provided on the grounding part, and a feeding point of the feeding part extends out from the opening. The embodiments of the present invention resolve a problem of relatively low efficiency when high-frequency bandwidth of

(Continued)

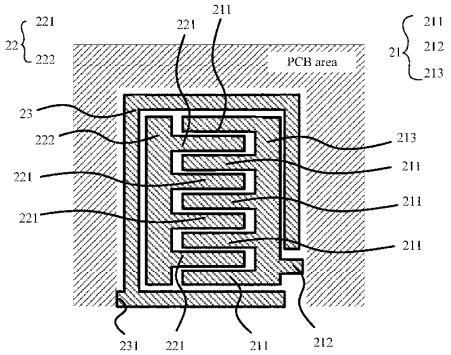

US009825367B2

(12) **United States Patent**
Gong et al.

(10) **Patent No.: US 9,825,367 B2**
(45) **Date of Patent: Nov. 21, 2017**

(54) **DIPOLE ANTENNA AND WIRELESS TERMINAL DEVICE**

(71) Applicant: **Huawei Device Co., Ltd.**, Shenzhen (CN)

(72) Inventors: **Yiwen Gong**, Wuhan (CN); **Kemeng Wang**, Wuhan (CN); **Yunpeng Shen**, Wuhan (CN); **Yuhui Wang**, Wuhan (CN); **Dejin Zhu**, Wuhan (CN)

(73) Assignee: **HUAWEI DEVICE CO., LTD.**, Shenzhen (CN)

(*) Notice: Subject to any disclaimer, the term of this patent is extended or adjusted under 35 U.S.C. 154(b) by 610 days.

(21) Appl. No.: **14/472,638**

(22) Filed: **Aug. 29, 2014**

(65) **Prior Publication Data**

US 2015/0116176 A1 Apr. 30, 2015

(51) **Int. Cl.**

H01Q 9/16	(2006.01)
H01Q 9/18	(2006.01)
H01Q 1/24	(2006.01)
H01Q 1/38	(2006.01)

(52) **U.S. Cl.**

CPC ***H01Q 9/18*** (2013.01); ***H01Q 1/243*** (2013.01); ***H01Q 9/16*** (2013.01); *H01Q 1/38* (2013.01)

(58) **Field of Classification Search**

CPC H01Q 9/18; H01Q 1/243; H01Q 9/16; H01Q 1/38

USPC 343/821

See application file for complete search history.

(56) **References Cited**

U.S. PATENT DOCUMENTS

4,495,505 A		1/1985	Shields	
5,532,708 A	*	7/1996	Krenz	H01Q 9/40 343/795
2005/0110698 A1		5/2005	Surducan et al.	
2006/0033666 A1		2/2006	Su et al.	

FOREIGN PATENT DOCUMENTS

CN	1734836	A	2/2006
CN	1825704	A	8/2006
CN	2901604	Y	5/2007
CN	201163660	Y	12/2008
CN	101849318	A	9/2010
CN	202013937	U	10/2011

(Continued)

OTHER PUBLICATIONS

Partial English Translation and Abstract of Chinese Patent Application No. CN2901604, Jul. 7, 2016, 4 pages.

(Continued)

Primary Examiner — Graham Smith

(74) *Attorney, Agent, or Firm* — Conley Rose, P.C.

(57) **ABSTRACT**

Embodiments of the present invention disclose a dipole antenna and a wireless terminal device, which relate to communications technologies and enable an antenna to have a relatively high performance and a relatively low production cost. The dipole antenna includes a first radiation arm, a second radiation arm, and a balun. The first radiation arm and the second radiation arm are both soldered on a dielectric substrate. The first radiation arm and the second radiation arm are separately connected to the balun electrically. The balun is electrically connected to a feeding point and a reference ground separately. The present invention may be applied to a terminal device.

19 Claims, 5 Drawing Sheets

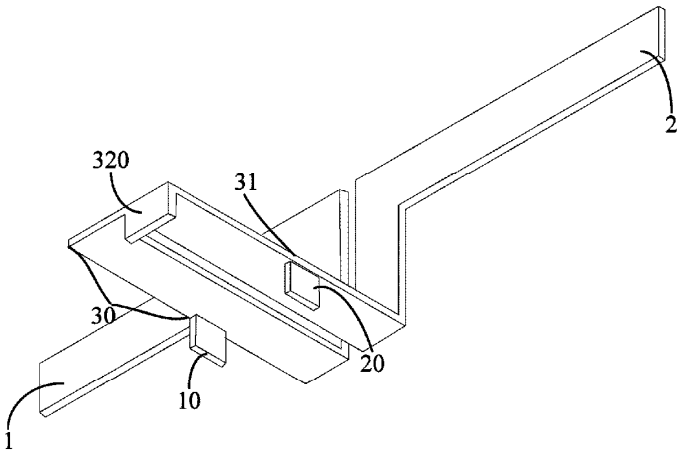

US009831542B2

(12) **United States Patent**
Wu et al.

(10) **Patent No.: US 9,831,542 B2**
(45) **Date of Patent: Nov. 28, 2017**

(54) **ANTENNA SYSTEM**

(71) Applicants: **Xiaopu Wu**, Shenzhen (CN); **Yongli Chen**, Shenzhen (CN)

(72) Inventors: **Xiaopu Wu**, Shenzhen (CN); **Yongli Chen**, Shenzhen (CN)

(73) Assignee: **AAC TECHNOLOGIES PTE. LTD.**, Singapore (SG)

(*) Notice: Subject to any disclaimer, the term of this patent is extended or adjusted under 35 U.S.C. 154(b) by 36 days.

(21) Appl. No.: **15/082,102**

(22) Filed: **Mar. 28, 2016**

(65) **Prior Publication Data**

US 2017/0012344 A1 Jan. 12, 2017

(30) **Foreign Application Priority Data**

Jul. 10, 2015 (CN) ..... 2015 2 0500898 U

(51) **Int. Cl.**
H01Q 1/24 (2006.01)
H01Q 1/48 (2006.01)
H01Q 5/328 (2015.01)

(52) **U.S. Cl.**
CPC ***H01Q 1/243*** (2013.01); ***H01Q 1/24*** (2013.01); ***H01Q 1/48*** (2013.01); ***H01Q 5/328*** (2015.01)

(58) **Field of Classification Search**
USPC ..... 343/702, 700 MS
See application file for complete search history.

(56) **References Cited**

U.S. PATENT DOCUMENTS

2014/0087674 A1* 3/2014 Teng H01Q 5/35 455/90.3
2014/0333495 A1* 11/2014 Vazquez H01Q 9/06 343/745

* cited by examiner

Primary Examiner — Jessica Han
Assistant Examiner — Hai Tran
(74) *Attorney, Agent, or Firm* — Na Xu; IPro, PLLC

(57) **ABSTRACT**

An antenna system applicable to a mobile communication device is provided in the present disclosure. The antenna system includes a metal frame; a grounding unit surrounded by the metal frame, and an internal antenna. One end of the grounding unit cooperates with the metal frame to form a clearance area, and the internal antenna is located in the clearance area. The internal antenna includes a feeding portion and a radiating portion; the radiating portion is spaced from the metal frame and is coupled to the metal frame. The feeding portion is connected to a feed source via a feed line.

11 Claims, 2 Drawing Sheets

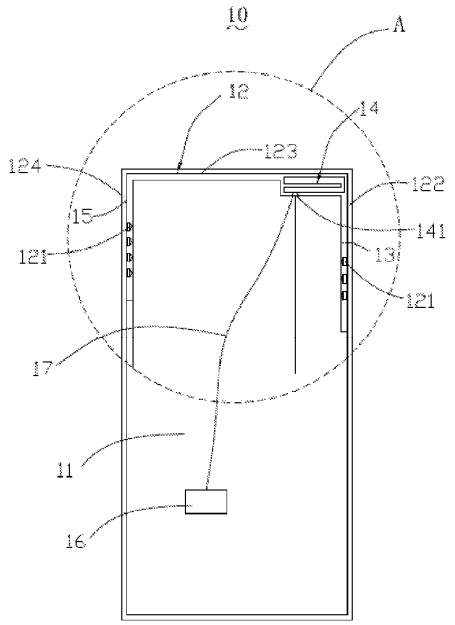

US009831546B2

(12) **United States Patent**
Miyake

(10) **Patent No.: US 9,831,546 B2**
(45) **Date of Patent: *Nov. 28, 2017**

(54) **MULTI-ANTENNA DEVICE AND COMMUNICATION DEVICE**

(71) Applicant: **Funai Electric Co., Ltd.**, Daito, Osaka (JP)

(72) Inventor: **Yasunari Miyake**, Osaka (JP)

(73) Assignee: **FUNAI ELECTRIC CO., LTD.**, Osaka (JP)

(*) Notice: Subject to any disclaimer, the term of this patent is extended or adjusted under 35 U.S.C. 154(b) by 0 days.

This patent is subject to a terminal disclaimer.

(21) Appl. No.: **15/074,076**

(22) Filed: **Mar. 18, 2016**

(65) **Prior Publication Data**

US 2016/0204506 A1 Jul. 14, 2016

Related U.S. Application Data

(63) Continuation of application No. 14/077,755, filed on Nov. 12, 2013, now Pat. No. 9,306,277.

(30) **Foreign Application Priority Data**

Nov. 20, 2012 (JP) 2012-254225

(51) **Int. Cl.**
H01Q 1/24 (2006.01)
H01Q 1/52 (2006.01)
H01Q 1/48 (2006.01)

(52) **U.S. Cl.**
CPC ***H01Q 1/521*** (2013.01); ***H01Q 1/243*** (2013.01); ***H01Q 1/48*** (2013.01)

(58) **Field of Classification Search**
CPC H01Q 1/521; H01Q 1/243; H01Q 1/48
USPC 343/702, 893, 846
See application file for complete search history.

(56) **References Cited**

U.S. PATENT DOCUMENTS

7,142,886 B2 11/2006 Murayama et al.
7,148,849 B2 12/2006 Lin
7,298,335 B2 * 11/2007 Usui ..... G06F 1/1616 343/700 MS
8,391,927 B2 3/2013 Castaneda et al.
8,922,448 B2 * 12/2014 Wong H01Q 1/48 343/702
2002/0021250 A1 2/2002 Asano
2002/0190905 A1 12/2002 Flint et al.
(Continued)

FOREIGN PATENT DOCUMENTS

JP 2001-339215 A 12/2001
JP 2003-037413 A 2/2003
(Continued)

OTHER PUBLICATIONS

Extended European Search Report of the corresponding European Patent Application No. 13192960.6, dated Mar. 4 2014.

Primary Examiner — Hoang Nguyen
(74) *Attorney, Agent, or Firm* — Global IP Counselors, LLP

(57) **ABSTRACT**

A multi-antenna device includes a grounding plate, a first antenna and a second antenna. The first antenna includes a first feed element that is grounded to the grounding plate via a first feed point. The second antenna includes a second feed element that is grounded to the grounding plate via a second feed point. Polarization planes of the first and second antennas intersect at a predetermined angle.

20 Claims, 9 Drawing Sheets

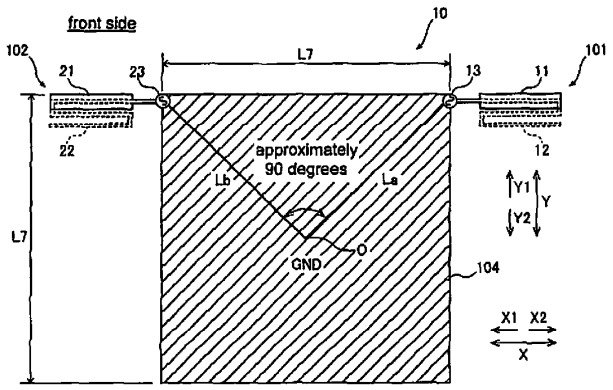

US009831555B2

(12) **United States Patent**
Sakurai

(10) **Patent No.: US 9,831,555 B2**
(45) **Date of Patent: Nov. 28, 2017**

(54) **ANTENNA DEVICE**

(71) Applicant: **Tyco Electronics Japan G.K.**, Kanagawa (JP)

(72) Inventor: **Yohei Sakurai**, Kanagawa (JP)

(73) Assignee: **Tyco Electronics Japan G.K.**, Kanagawa-ken (JP)

(*) Notice: Subject to any disclaimer, the term of this patent is extended or adjusted under 35 U.S.C. 154(b) by 439 days.

(21) Appl. No.: **14/153,599**

(22) Filed: **Jan. 13, 2014**

(65) **Prior Publication Data**

US 2014/0198003 A1 Jul. 17, 2014

(30) **Foreign Application Priority Data**

Jan. 11, 2013 (JP) 2013-003216

(51) **Int. Cl.**

H01Q 1/24	(2006.01)
H01Q 5/378	(2015.01)
H01Q 5/321	(2015.01)
H01Q 5/371	(2015.01)

(52) **U.S. Cl.**
CPC ***H01Q 5/378*** (2015.01); ***H01Q 5/321*** (2015.01); ***H01Q 5/371*** (2015.01)

(58) **Field of Classification Search**
CPC H01Q 1/243; H01Q 5/321; H01Q 5/378; H01Q 5/371; H01Q 9/145
USPC 343/702, 846
See application file for complete search history.

(56) **References Cited**

U.S. PATENT DOCUMENTS

6,081,242	A *	6/2000	Wingo	H01Q 1/242 333/32
6,400,339	B1 *	6/2002	Edvardsson	H01Q 1/242 343/702
6,529,170	B1	3/2003	Nishizawa et al.	
6,650,294	B2 *	11/2003	Ying	H01Q 1/243 343/700 MS
7,423,598	B2 *	9/2008	Bit-Babik	H01Q 1/243 343/700 MS

(Continued)

FOREIGN PATENT DOCUMENTS

EP	1608035 A1	12/2005
EP	2418728 A1	2/2012

(Continued)

OTHER PUBLICATIONS

"Small Antennas Based on CRLH Structures", IEEE Antennas and Propagation Magazine, vol. 53, No. 2, Apr. 2011, 16 pages.

(Continued)

Primary Examiner — Brian Young
(74) *Attorney, Agent, or Firm* — Barley Snyder

(57) **ABSTRACT**

An antenna device is provided and includes a circuit board, a first linear antenna, and a second linear antenna. The circuit board includes a grounding pattern and a feeding point insulated from the grounding pattern. The first linear antenna is connected to the grounding pattern and includes a first inductive element positioned between distal ends of the first linear antenna. The second linear antenna is connected to the feeding point and capacitively coupled to one of the distal ends of the first linear antenna. The second linear antenna includes a second inductive element positioned proximate a middle section of the second linear antenna.

14 Claims, 3 Drawing Sheets

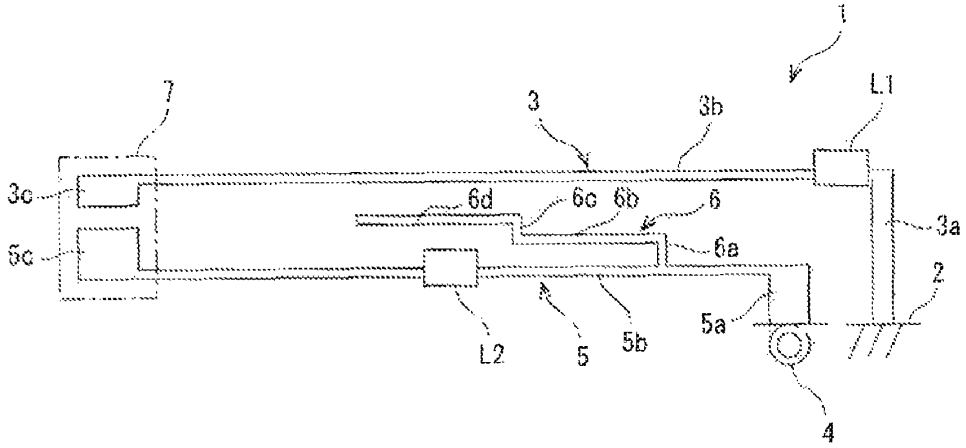

US009831928B2

(12) **United States Patent**
Kim et al.

(10) **Patent No.: US 9,831,928 B2**
(45) **Date of Patent: Nov. 28, 2017**

(54) **ANTENNA DEVICE AND ELECTRONIC DEVICE INCLUDING THE SAME**

(71) Applicant: **Samsung Electronics Co., Ltd.**, Gyeonggi-do (KR)

(72) Inventors: **Jaehyung Kim**, Gyeonggi-do (KR); **Jae-Ho Lim**, Gyeonggi-do (KR); **Hosaeng Kim**, Gyeonggi-do (KR); **Jesun Moon**, Gyeonggi-do (KR); **Sungyeul Hong**, Gyeonggi-do (KR); **Kyung-Jong Lee**, Gyeonggi-do (KR); **Jinkyu Bang**, Gyeonggi-do (KR); **Hanbin Lee**, Gyeonggi-do (KR); **Kyung-Bae Ko**, Gyeonggi-do (KR); **Donghwan Kim**, Gyeonggi-do (KR); **Taegyu Kim**, Gyeonggi-do (KR); **Jae-Bong Chun**, Gyeonggi-do (KR)

(73) Assignee: **Samsung Electronics Co., Ltd** (KR)

(*) Notice: Subject to any disclaimer, the term of this patent is extended or adjusted under 35 U.S.C. 154(b) by 0 days.

(21) Appl. No.: **15/351,142**

(22) Filed: **Nov. 14, 2016**

(65) **Prior Publication Data**

US 2017/0141820 A1 May 18, 2017

(30) **Foreign Application Priority Data**

Nov. 13, 2015 (KR) 10-2015-0159674
Apr. 8, 2016 (KR) 10-2016-0043135

(51) **Int. Cl.**
H04B 7/0404 (2017.01)
H04B 1/40 (2015.01)
H04M 1/02 (2006.01)

(52) **U.S. Cl.**
CPC ***H04B 7/0404*** (2013.01); ***H04B 1/40*** (2013.01); ***H04M 1/0216*** (2013.01); ***H04M 1/0266*** (2013.01)

(58) **Field of Classification Search**
CPC H04B 7/0404; H04B 1/40; H04M 1/0216; H04M 1/0266
See application file for complete search history.

(56) **References Cited**

U.S. PATENT DOCUMENTS

6,246,374 B1 6/2001 Perrotta et al.
7,417,593 B1 8/2008 Hsiao et al.
(Continued)

FOREIGN PATENT DOCUMENTS

KR 1020130122793 11/2013

OTHER PUBLICATIONS

International Search Report dated Feb. 10, 2017 issued in counterpart application No. PCT/KR2016/012956, 9 pages.

Primary Examiner — Tuan Pham
(74) *Attorney, Agent, or Firm* — The Farrell Law Firm, P.C.

(57) **ABSTRACT**

An electronic device is provided. The electronic device includes a first housing a second housing, a first display disposed on the first housing and a second display disposed on the second housing, a connecting member configured to couple the first housing to the second housing such that the first housing and the second housing are foldable relative to each other, and the second surface and the fourth surface face each other when the first housing and the second housing are folded toward each other, a first conductive element disposed within the first housing and between the second surface and the first display, and an intermediate conductive plate disposed within the second housing and between the fourth surface and the second display, the intermediate conductive plate having an opening that faces the first conductive element when the first housing and the second housing are in a folded configuration.

20 Claims, 48 Drawing Sheets

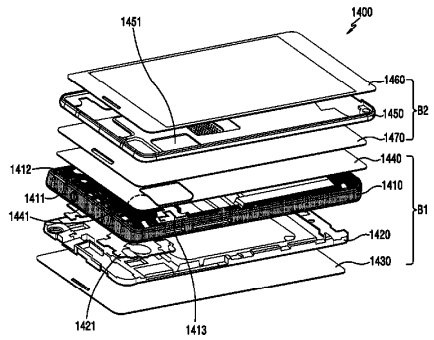

US009837715B2

(12) **United States Patent**
Sugimoto et al.

(10) **Patent No.: US 9,837,715 B2**
(45) **Date of Patent: Dec. 5, 2017**

(54) **ANTENNA DEVICE**

(71) Applicant: **DENSO CORPORATION**, Kariya, Aichi-pref. (JP)

(72) Inventors: **Yuji Sugimoto**, Kariya (JP); **Tadao Suzuki**, Kariya (JP); **Hiroyuki Izumi**, Kariya (JP)

(73) Assignee: **DENSO CORPORATION**, Kariya, Aichi-pref. (JP)

(*) Notice: Subject to any disclaimer, the term of this patent is extended or adjusted under 35 U.S.C. 154(b) by 107 days.

(21) Appl. No.: **14/391,525**

(22) PCT Filed: **Apr. 1, 2013**

(86) PCT No.: **PCT/JP2013/002239**
§ 371 (c)(1),
(2) Date: **Oct. 9, 2014**

(87) PCT Pub. No.: **WO2013/153770**
PCT Pub. Date: **Oct. 17, 2013**

(65) **Prior Publication Data**

US 2015/0061964 A1 Mar. 5, 2015

(30) **Foreign Application Priority Data**

Apr. 13, 2012 (JP) 2012-092005

(51) **Int. Cl.**
H01Q 21/00 (2006.01)
H01Q 5/00 (2015.01)
(Continued)

(52) **U.S. Cl.**
CPC ***H01Q 5/0024*** (2013.01); ***H01Q 1/3275*** (2013.01); ***H01Q 5/30*** (2015.01);
(Continued)

(58) **Field of Classification Search**
USPC ..... 343/893, 700 MS, 858
See application file for complete search history.

(56) **References Cited**

U.S. PATENT DOCUMENTS

7,136,022 B2 * 11/2006 Sato H01Q 9/26 343/702
7,831,230 B2 * 11/2010 Nail H04B 1/0057 333/126
(Continued)

FOREIGN PATENT DOCUMENTS

EP 2139065 A1 12/2009
JP H09181525 A 7/1997
(Continued)

OTHER PUBLICATIONS

Office Action dated Oct. 6, 2015 in corresponding Japanese Application No. 2012-92005.
(Continued)

Primary Examiner — Jessica Han
Assistant Examiner — Hai Tran
(74) *Attorney, Agent, or Firm* — Harness, Dickey & Pierce, P.L.C.

(57) **ABSTRACT**

An antenna device includes a first antenna element and a second antenna element. The first antenna element operates at a first predetermined frequency band. The second antenna element operates at a second predetermined frequency band that is different from the first predetermined frequency band. The first antenna element includes a base end portion, a front end portion, a folded portion, a first side portion disposed between the base end portion and the folded portion, and a second side portion disposed between the folded portion and the front end portion. A direction of a current vector in the first side portion is equal to a direction of a current vector in
(Continued)

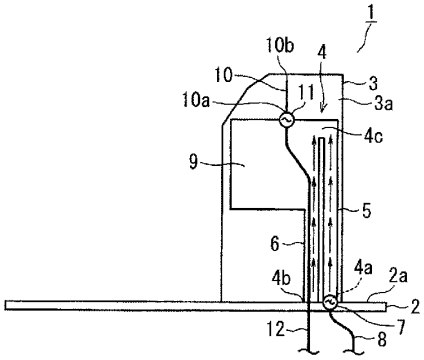

US009837716B2

(12) **United States Patent**
Huang et al.

(10) **Patent No.: US 9,837,716 B2**
(45) **Date of Patent: Dec. 5, 2017**

(54) **MULTIBAND ANTENNA**

(71) Applicant: **GETAC TECHNOLOGY CORPORATION**, Hsinchu County (TW)

(72) Inventors: **Jia-Min Huang**, Taipei (TW); **Wen-Cheng Chang**, Taipei (TW)

(73) Assignee: **Getac Technology Corporation**, Hsinchu County (TW)

(*) Notice: Subject to any disclaimer, the term of this patent is extended or adjusted under 35 U.S.C. 154(b) by 17 days.

(21) Appl. No.: **15/076,554**

(22) Filed: **Mar. 21, 2016**

(65) **Prior Publication Data**

US 2017/0271763 A1 Sep. 21, 2017

(51) **Int. Cl.**

H01Q 1/48	(2006.01)
H01Q 5/321	(2015.01)
H01Q 1/24	(2006.01)
H01Q 1/52	(2006.01)

(52) **U.S. Cl.**

CPC ***H01Q 5/321*** (2015.01); ***H01Q 1/24*** (2013.01); ***H01Q 1/48*** (2013.01); ***H01Q 1/52*** (2013.01)

(58) **Field of Classification Search**

USPC 343/846, 702

See application file for complete search history.

(56) **References Cited**

U.S. PATENT DOCUMENTS

5,926,150	A *	7/1999	McLean	G01R 29/0821 343/700 MS
7,466,276	B1 *	12/2008	Chen	H01Q 1/2258 343/700 MS
7,589,692	B2 *	9/2009	Kim	H01Q 9/0442 343/700 MS
2014/0340265	A1 *	11/2014	Vazquez	H01Q 9/42 343/702

* cited by examiner

Primary Examiner — Jessica Han
Assistant Examiner — Hai Tran

(57) **ABSTRACT**

A multiband antenna is provided. A resonance path is provided by a first connection segment and a low-frequency radiating element with a closed pattern to enable the multiband antenna to support a low frequency band, wherein a first side of the closed pattern is wider than a second side of the closed pattern. The second side of the closed pattern is connected to one end of the first connection segment. The other end of the first connection segment is connected to a feed element.

16 Claims, 3 Drawing Sheets

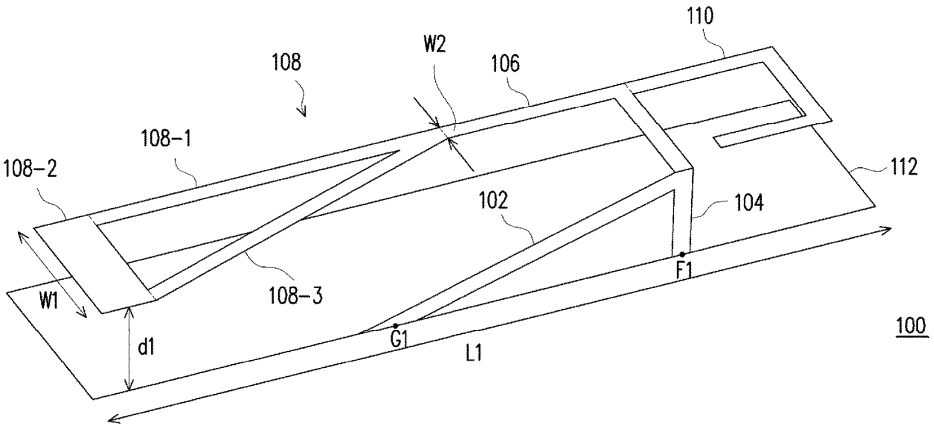

US009843090B2

(12) **United States Patent**
Chou et al.

(10) **Patent No.: US 9,843,090 B2**
(45) **Date of Patent: Dec. 12, 2017**

(54) **MULTI-FREQUENCY ANTENNA**

(71) Applicant: **UNICTRON TECHNOLOGIES CORP.**, Hsin-Chu (TW)

(72) Inventors: **Chih-Shen Chou**, Miaoli County (TW); **Tsung-Shou Yeh**, Hsin-Chu (TW); **Shih-Chun Huang**, Taoyuan County (TW); **Hsiang-Cheng Yang**, Taoyuan County (TW)

(73) Assignee: **Unictron Technologies Corporation**, Hsin-Chu (TW)

(*) Notice: Subject to any disclaimer, the term of this patent is extended or adjusted under 35 U.S.C. 154(b) by 217 days.

(21) Appl. No.: **14/513,222**

(22) Filed: **Oct. 14, 2014**

(65) **Prior Publication Data**

US 2015/0130676 A1 May 14, 2015

(30) **Foreign Application Priority Data**

Nov. 14, 2013 (TW) ..... 102221344 U

(51) **Int. Cl.**

H01Q 9/00	(2006.01)
H01Q 1/24	(2006.01)
H01Q 21/30	(2006.01)
H01Q 5/371	(2015.01)
H01Q 5/378	(2015.01)
H01Q 1/38	(2006.01)

(52) **U.S. Cl.**

CPC ***H01Q 1/243*** (2013.01); ***H01Q 5/371*** (2015.01); ***H01Q 5/378*** (2015.01); ***H01Q 21/30*** (2013.01); *H01Q 1/38* (2013.01)

(58) **Field of Classification Search**

USPC ..... 343/700 MS, 702, 745, 893

See application file for complete search history.

(56) **References Cited**

U.S. PATENT DOCUMENTS

6,614,398	B2 *	9/2003	Kushihi	H01Q 1/243 343/700 MS
7,786,938	B2 *	8/2010	Sorvala	H01Q 1/243 343/700 MS
2011/0095947	A1 *	4/2011	Chou	H01Q 9/0421 343/700 MS

* cited by examiner

Primary Examiner — Jessica Han
Assistant Examiner — Hai Tran
(74) *Attorney, Agent, or Firm* — Winston Hsu

(57) **ABSTRACT**

A multi-frequency antenna includes a ground layer, at least one antenna unit and at least one antenna network. The antenna unit has its one end electrically connected to the ground layer and its other end electrically connected to the antenna network for generating at least one first resonance frequencies. The antenna network includes at least one feeding circuit, and at least one resonance unit. Each resonance unit includes at least one resonant segment. Each resonant segment is electromagnetically coupled with the adjacent ground layer to generate at least one second resonance frequency. Thus, the multi-frequency antenna is capable of generating multiple different resonance frequencies.

14 Claims, 17 Drawing Sheets

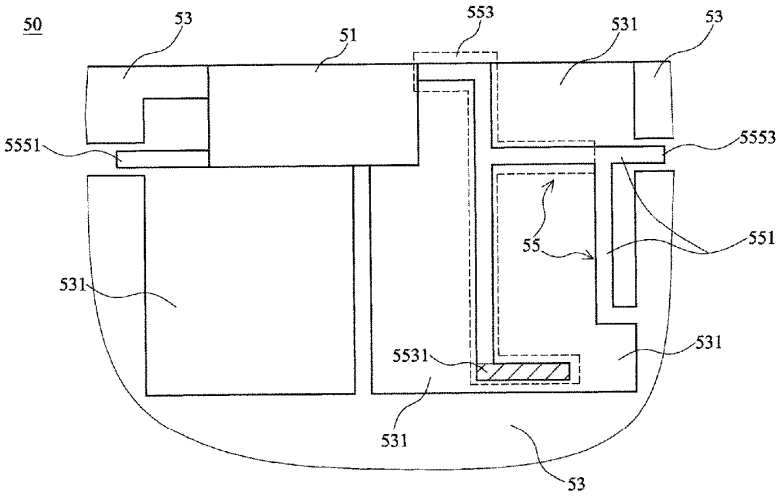

US009843091B2

(12) **United States Patent**
Mow et al.

(10) **Patent No.: US 9,843,091 B2**
(45) **Date of Patent: Dec. 12, 2017**

(54) **ELECTRONIC DEVICE WITH CONFIGURABLE SYMMETRIC ANTENNAS**

(71) Applicant: **Apple Inc.**, Cupertino, CA (US)

(72) Inventors: **Matthew A. Mow**, Los Altos, CA (US); **Xu Han**, San Jose, CA (US); **James G. Judkins**, Campbell, CA (US); **Liang Han**, Sunnyvale, CA (US); **Mattia Pascolini**, San Francisco, CA (US); **Ming-Ju Tsai**, Cupertino, CA (US); **Nanbo Jin**, Milpitas, CA (US); **Thomas E. Biedka**, San Jose, CA (US); **Victor C. Lee**, Sunnyvale, CA (US); **Yuehui Ouyang**, Sunnyvale, CA (US)

(73) Assignee: **Apple Inc.**, Cupertino, CA (US)

(*) Notice: Subject to any disclaimer, the term of this patent is extended or adjusted under 35 U.S.C. 154(b) by 267 days.

(21) Appl. No.: **14/701,323**

(22) Filed: **Apr. 30, 2015**

(65) **Prior Publication Data**

US 2016/0322699 A1 Nov. 3, 2016

(51) **Int. Cl.**
H01Q 1/24 (2006.01)
H01Q 13/10 (2006.01)
(Continued)

(52) **U.S. Cl.**
CPC ***H01Q 1/243*** (2013.01); ***H01Q 5/321*** (2015.01); ***H01Q 5/328*** (2015.01); ***H01Q 5/335*** (2015.01);
(Continued)

(58) **Field of Classification Search**
CPC H01Q 1/243; H01Q 13/10; H01Q 13/103
(Continued)

(56) **References Cited**

U.S. PATENT DOCUMENTS

6,737,439 B2 5/2004 Kinghorn et al.
6,903,693 B1 6/2005 Lee et al.
(Continued)

FOREIGN PATENT DOCUMENTS

EP 2500979 9/2012
EP 2528165 11/2012
(Continued)

OTHER PUBLICATIONS

Jin et al., U.S. Appl. No. 14/691,304, filed Apr. 20, 2015.

Primary Examiner — Dameon E Levi
Assistant Examiner — David Lotter
(74) *Attorney, Agent, or Firm* — Treyz Law Group, P.C.; G. Victor Treyz; Tianyi He

(57) **ABSTRACT**

An electronic device may have wireless circuitry with antennas. An antenna resonating element arm for an antenna may be formed from peripheral conductive structures running along the edges of a device housing that are separated from a round by an elongated opening. The electronic device may have a central longitudinal axis that divides the antenna resonating element arm and other antenna structures into symmetrical halves that exhibit mirror symmetry with respect to the central longitudinal axis. The antenna structures may include symmetrical slot antenna resonating elements on opposing sides of the central longitudinal axis. Electrical components such as switches and antenna tuning inductors may be coupled to the antenna structures in a configuration that is symmetrical with respect to the central longitudinal axis. The electrical components may be used to place the antenna structures in an unflipped configuration or in a symmetrical flipped configuration.

20 Claims, 8 Drawing Sheets

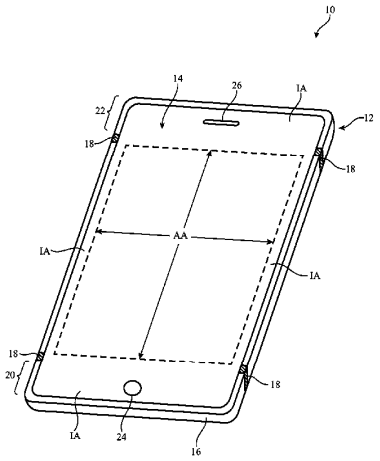

US009843095B2

(12) **United States Patent**
Ohguchi et al.

(10) **Patent No.: US 9,843,095 B2**
(45) **Date of Patent: Dec. 12, 2017**

(54) **ANTENNA ELEMENT AND ANTENNA DEVICE**

(71) Applicant: **Sharp Kabushiki Kaisha**, Osaka-shi, Osaka (JP)

(72) Inventors: **Shuhhei Ohguchi**, Osaka (JP); **Hiroyuki Takebe**, Osaka (JP)

(73) Assignee: **SHARP KABUSHIKI KAISHA**, Sakai (JP)

(*) Notice: Subject to any disclaimer, the term of this patent is extended or adjusted under 35 U.S.C. 154(b) by 0 days.

(21) Appl. No.: **14/770,502**

(22) PCT Filed: **Jul. 1, 2014**

(86) PCT No.: **PCT/JP2014/067565**
§ 371 (c)(1),
(2) Date: **Aug. 26, 2015**

(87) PCT Pub. No.: **WO2015/005182**
PCT Pub. Date: **Jan. 15, 2015**

(65) **Prior Publication Data**

US 2016/0020513 A1 Jan. 21, 2016

(30) **Foreign Application Priority Data**

Jul. 8, 2013 (JP) 2013-142717

(51) **Int. Cl.**

H01Q 1/12	(2006.01)
H01Q 1/50	(2006.01)
H01Q 1/24	(2006.01)
H01Q 9/42	(2006.01)
H01Q 1/27	(2006.01)
H01Q 1/36	(2006.01)
H01Q 1/46	(2006.01)
H01Q 21/30	(2006.01)

(52) **U.S. Cl.**
CPC ***H01Q 1/50*** (2013.01); ***H01Q 1/243*** (2013.01); ***H01Q 1/273*** (2013.01); ***H01Q 1/36*** (2013.01); ***H01Q 1/46*** (2013.01); ***H01Q 9/42*** (2013.01); ***H01Q 21/30*** (2013.01)

(58) **Field of Classification Search**
CPC H01Q 1/50; H01Q 1/36; H01Q 1/273
USPC ..... 343/43, 718, 700 MS
See application file for complete search history.

(56) **References Cited**

U.S. PATENT DOCUMENTS

2007/0052595 A1 3/2007 Harano
2012/0188450 A1 * 7/2012 Lynn H04B 1/3805 348/552

FOREIGN PATENT DOCUMENTS

JP 2007-135233 A 5/2007
JP 2008-092265 A 4/2008
WO WO 2008/017844 * 8/2007

OTHER PUBLICATIONS

"Antenna Theory: A Review," Constantine A. Balanis, Proceedings of the IEEE, vol. 80, No. 1, section III.B, Jan. 1992.*

* cited by examiner

Primary Examiner — Hoang Nguyen
Assistant Examiner — Jae Kim
(74) *Attorney, Agent, or Firm* — Keating & Bennett, LLP

(57) **ABSTRACT**

An antenna element (**10**) includes: a feeding point (**16**); a connector (**15**) in which an external antenna is detachably engaged; a first partial element (**11**) connecting the feeding point (**16**) and the connector (**15**); and a second partial element (**12**) branching from the first partial element (**11**) and having an open end (**12***a*) at a different position from the connector (**15**).

2 Claims, 6 Drawing Sheets